DQC H-SERIES ISO-B FEMALE PLUG

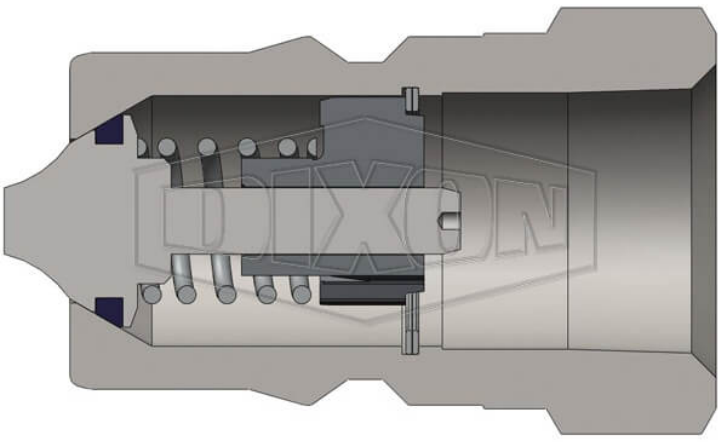

** Imágenes referenciales*
*** Algunas características pueden variar sin previo aviso, venta sujeta a stock disponible*

FECHA
: 11/23/2026 10:52 PM

SKU
: 24479

MARCA
: DIXON VALVE

MODELO
: H2BF2-B

Features:
Poppet style shut-off valves
Designed to prevent fluid loss when disconnected

Construction:
Machined components are manufactured using solid bar stock
Stainless steel balls, retaining rings and springs maximize corrosion resistance and extend service life.

Available Options:
Contact Dixon for all available option adders
Oxy-Clean treatment is available

Compatibility & Interchange Data:
Meets dimensional requirements of ISO 7241 Series B
Interchangeable with Parker-Hannifin 60 Series, Snap-Tite 72-Series, Hansen HK-Series, Faster Series 'HNV', Aeroquip/Eaton FD45, Stucchi Series IRB/IRBO/IRBX

Safety notes:
WARNING: Cancer and Reproductive Harm- www.P65Warnings.ca.gov

2645 Executive Park Drive, Weston, Fort Lauderdale, FL 33331, EEUU
sales@kmxusa.us
www.kmxusa.us

ESPECIFICACIONES TÉCNICAS

Body Size	1/4"
Burst Pressure	15000 PSI (1000 bar)
Factory Part Number	H2BF2-B
Hex	3/4"
Length	1.55" (39.4mm)
Material	Brass
Maximum OD	0.83" (21.1mm)
Maximum Operating Pressure	3000 PSI (200 bar)
Temperature Range	-40°F to +250°F (-40°C to +121°C)
Thread	Female BSPP
Thread Size	1/4"-19
Weight Lb	0.0900

KMX

2645 Executive Park Drive, Weston, Fort Lauderdale, FL 33331, EEUU
sales@kmxusa.us

www.kmxusa.us