DRY EVOTEK COUPLINGS

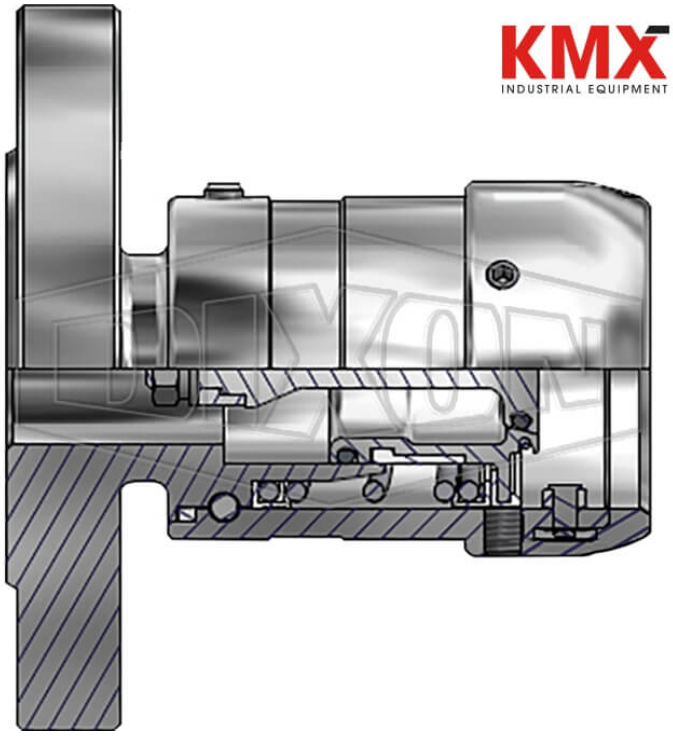

** Imágenes referenciales*
*** Algunas características pueden variar sin previo aviso, venta sujeta a stock disponible*

FECHA
: 11/23/2026 06:47 PM

SKU
: 11618

MARCA
: DIXON VALVE

MODELO
: DDEC100SSFL

Applications:
Specifically designed for use in the chemical industry
Rotating the coupling 120° clockwise opens the valves where the high pressure engagement between hose and tank unit ensures a strong connection

Specifications:
Working pressure 360 PSI at ambient temperature 70°F (21°C)

Features:
Low connecting forces even against pressure
Ergonomic handle (DN40 and bigger)
Good transmission ratio in the cam curve
Wide range of chemical resistance due to high-quality material selection
Minimized spillage during de-coupling

Construction:
Body: stainless steel 1.4404
Handle: PE (DN40 and bigger)
O-rings: FPM, NBR, EPDM, FFKM
Thread seal: PTFE, FDA and others upon request

Note:
1" coupler has knurled sleeve

Safety notes:
WARNING: Cancer and Reproductive Harm- www.P65Warnings.ca.gov

Approvals
PED 2014/68/EU 4.3
ATEX 2014/34/EU Category 3G

2645 Executive Park Drive, Weston, Fort Lauderdale, FL 33331, EEUU
sales@kmxusa.us
www.kmxusa.us

ESPECIFICACIONES TÉCNICAS

Description	Coupler x 150# Flange
Factory Part Number	DDEC100SSFL
Flange Size	1"
Size	59.5 mm

KMX
2645 Executive Park Drive, Weston, Fort Lauderdale, FL 33331, EEUU
sales@kmxusa.us
www.kmxusa.us