DQC CM-SERIES INDUSTRIAL MOLD INTERCHANGE UNVALVED COUPLER 45° HOSE BARB

FECHA
: 11/23/2026 11:18 PM

SKU
: 4030

MARCA
: DIXON VALVE

MODELO
: 3CM4S3-B-E

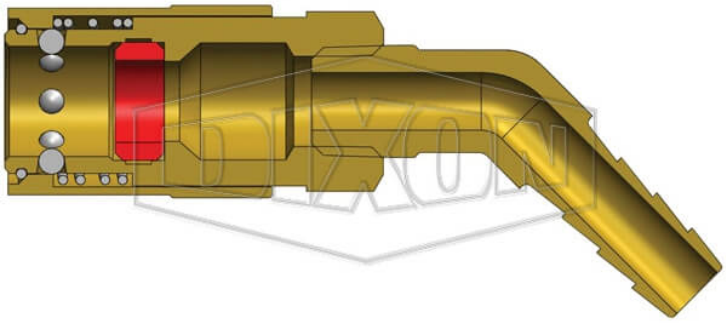

** Imágenes referenciales*
*** Algunas características pueden variar sin previo aviso, venta sujeta a stock disponible*

Specifications:
Rated pressure for connected Brass Unvalved Coupler and Brass Plug: 300 PSI (20 bar) Maximum Working and 14,500 PSI (1,000 bar) Burst
Rated pressure for connected Brass Unvalved Coupler and Steel Plug: 500 PSI (35 bar) Maximum Working and 14,200 PSI (1,000 bar) Burst

Construction:
Machined components are manufactured using solid bar stock
Stainless steel balls, retaining rings and springs maximize corrosion resistance and extend service life.
Silicone gaskets are standard

Compatibility & Interchange Data:
Mold Coolant Interchange
Foster Series- FJT, Hansen Flo-Temp, Tomco MC-Series, Parker Moldmate, DME Jiffy-Tite

Safety notes:
Maximum working and burst pressure is based on a coupled set, contact Dixon for pressure ratings.
WARNING: Cancer and Reproductive Harm- www.P65Warnings.ca.gov

2645 Executive Park Drive, Weston, Fort Lauderdale, FL 33331, EEUU
sales@kmxusa.us
www.kmxusa.us

ESPECIFICACIONES TÉCNICAS

Body Size	3/8"
Factory Part Number	3CM4S3-B-E
Hose ID	3/8"
Length	3.83"
Material	Brass
Maximum OD	0.95"
Temperature Range	-90°F to +400°F (-68°C to +205°C)
Weight Lb	0.3600

KMX

2645 Executive Park Drive, Weston, Fort Lauderdale, FL 33331, EEUU

sales@kmxusa.us

www.kmxusa.us