DQC V-SERIES SNAP-TITE H/IH INTERCHANGE VALVED FEMALE COUPLER

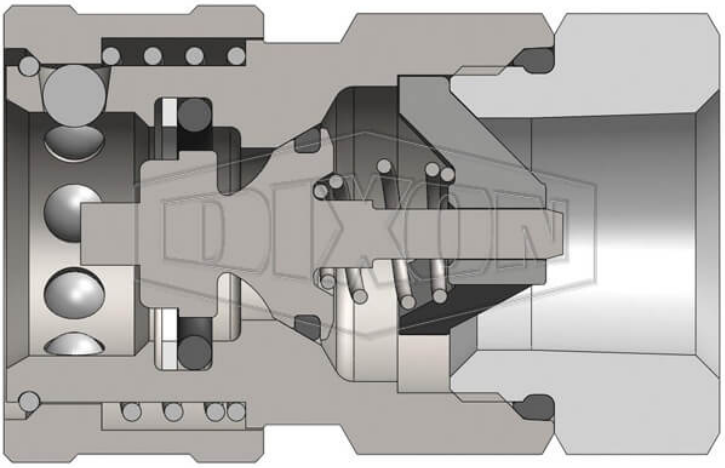

** Imágenes referenciales*
*** Algunas características pueden variar sin previo aviso, venta sujeta a stock disponible*

FECHA
: 11/23/2026 11:33 PM

SKU
: 22332

MARCA
: DIXON VALVE

MODELO
: 2VBF2-SS

Features:
General purpose hydraulic quick-connect provides superior flow characteristics for a variety of applications

Construction:
Machined components are manufactured using solid bar stock
Stainless steel balls, retaining rings and springs maximize corrosion resistance and extend service life.
Steel componentry is plated using ROHS Compliant Trivalent Chrome.
Steel coupler sleeves are hardened to resist deformation and maximize service life.
Tubular 'TV' valves are constructed from steel bar stock and are designed for optimum performance in pneumatic applications.
Nitrile (Buna-N) seals are standard
All couplers incorporate a PTFE anti-extrusion ring to protect the seal components from dynamic impulse damage.
Valve seals are crimped in place to maintain integrity during excessive flow conditions and pressurized connection.

Available Options:
Contact Dixon for all available option adders
Standard seal options include: FKM, EPDM, Steam-EP, FDA FKM, Mil-Nitrile, Fuel Nitrile and Silicone
Kalrez® seal options include: 4079, 6375 and 7075
Valve options include: Unvalved, tubular, steel, brass and 316 stainless steel
Sleeve options include: Sleeve-lock, Flanged and Silicone-flanged
Oxy-clean treatment is available

Compatibility & Interchange Data:
Interchangeable to MIL-C-51234
Interchangeable with Snap-Tite H/IH Series and Faster TNV

2645 Executive Park Drive, Weston, Fort Lauderdale, FL 33331, EEUU
sales@kmxusa.us
www.kmxusa.us

Safety notes:

WARNING: Cancer and Reproductive Harm- www.P65Warnings.ca.gov

ESPECIFICACIONES TÉCNICAS

Body Size	1/4"
Burst Pressure	10000 PSI (700 bar)
Factory Part Number	2VBF2-SS
Hex	7/8"
Length	1.81" (46.0mm)
Material	316 Stainless Steel
Maximum OD	0.99" (25.1mm)
Maximum Operating Pressure	5000 PSI (345 bar)
Temperature Range	-40°F to +250°F (-40°C to +121°C)
Thread	Female BSPP
Thread Size	1/4"-19
Weight Lb	0.2500

KMX
2645 Executive Park Drive, Weston, Fort Lauderdale, FL 33331, EEUU
sales@kmxusa.us
www.kmxusa.us