SWIVEL JOINT STYLE 20 FEMALE NPT X FEMALE NPT

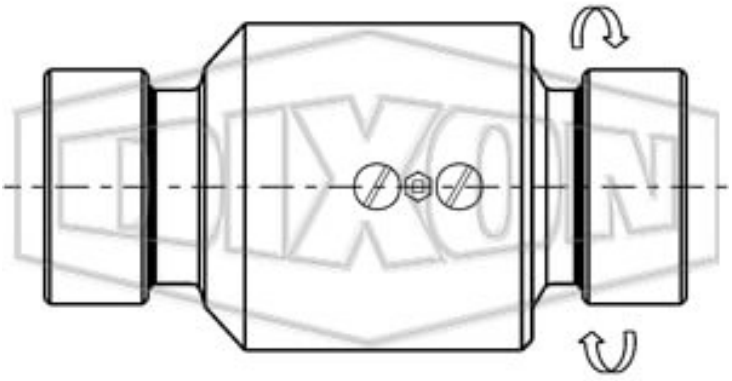

** Imágenes referenciales*
*** Algunas características pueden variar sin previo aviso, venta sujeta a stock disponible*

FECHA
: 11/24/2026 02:12 AM

SKU
: 26861

MARCA
: DIXON VALVE

MODELO
: 220FXFSS10200

Applications:
Used wherever a leak-proof swivel connection is needed in pipelines or in combination with hoses to eliminate hose twisting
Industries range from petroleum, petrochemical, refining, mining, distilling, paint, farm irrigation and fertilizing, wastewater treatment plants and food and beverage process equipment. Dixon™\'s swivel joints are found in blending plants, drum filling applications, fluid and dry bulk transfer, vacuum trucks, oil and gas trucks and water trucks. Larger swivels can be found in the steel industry, marine bulk transfer and many more.
Features:
Spring loaded triple V-ring sealing system ensures a leakproof seal at either high or low pressure and extends seal life
Full 360° rotational movement
Wide spacing between dual ball bearing raceways ensures greater load bearing capacity
Precision-machined design ensures alignment and years of trouble-free service
Hydrostatic testing is performed on all swivels before shipment
O-ring dust seal protects the ball races and seals chamber from outside elements
Construction:
The stainless steel swivels are manufactured in 316 grade stainless steel for superior corrosion resistance.
Available Options:
End configurations: female NPT, #150 flange, TTMA flange, grooved, weld end and many other variations
Seal options: Buna, FKM, PTFE, EPDM, FDA Buna, FFKM
Ball bearing materials: carbon steel, 440 stainless steel and 316 stainless steel
Grease materials: Lithium, FDA approved/food grade and silicone
Swivels that include oxygen, steam or submerged service can be specifically

2645 Executive Park Drive, Weston, Fort Lauderdale, FL 33331, EEUU
sales@kmxusa.us
www.kmxusa.us

designed for unique applications (special order)
100% full penetration welding available
Note:
Custom swivel options available, contact Dixon™ for information. Our factory sales and engineering staff will be happy to help you evaluate your swivel application and determine the proper swivel joint needed. Please call 800.355.1991.
Re-build kits available
Safety notes:
The Swivel should be packed such that the surfaces coming in contact with the fluid being handled are compatible with that fluid. In case of the use of the swivel in submerged service, this would include the dust seals and ball bearings. We always recommend the use of the stainless steel ball bearings when building a swivel for submerged service, since should the standard carbon steel ball bearings rust together, they make it possible to dissemble the swivel and may affect operation.
Lubrication should be performed periodically, depending on service and operating conditions. Twice yearly is normally sufficient.
WARNING: Cancer and Reproductive Harm- www.P65Warnings.ca.gov

ESPECIFICACIONES TÉCNICAS

Ball Bearings	Carbon Steel
Dust Seal	Buna-N
Grease	Standard
Material	Stainless Steel
Factory Part Number	220FXFSS10200
Pressure Seal	FKM
Retainer	PTFE
Size	2"
Style	V-Ring

KMX
2645 Executive Park Drive, Weston, Fort Lauderdale, FL 33331, EEUU
sales@kmxusa.us
www.kmxusa.us