DQC H-SERIES ISO-B HIGH VOLUME FEMALE COUPLER

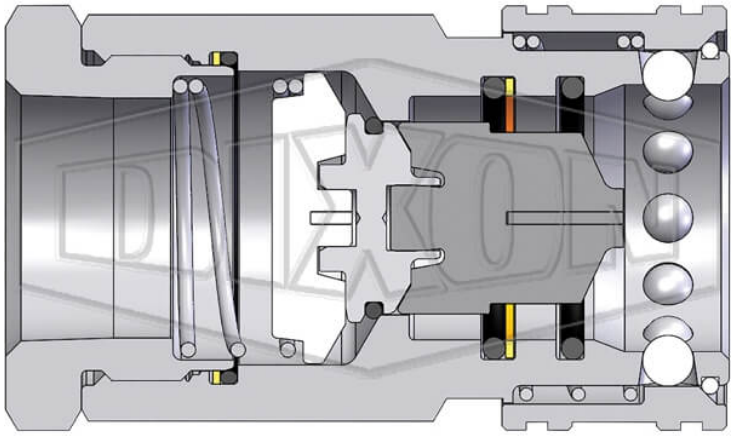

** Imágenes referenciales*
*** Algunas características pueden variar sin previo aviso, venta sujeta a stock disponible*

FECHA
: 11/23/2026 11:44 PM

SKU
: 22044

MARCA
: DIXON VALVE

MODELO
: 12HBF12-B

Features:
Poppet style shut-off valves
Designed to prevent fluid loss when disconnected

Construction:
Machined components are manufactured using solid bar stock
Stainless steel balls, retaining rings and springs maximize corrosion resistance and extend service life.
Steel componentry is plated using ROHS Compliant Trivalent Chrome.
Steel coupler sleeves are hardened to resist deformation and maximize service life.
Nitrile (Buna-N) seals are standard
Redundant O-ring sealing system with Hytrel back-up ring

Available Options:
Contact Dixon for all available option adders
Standard seal options include: FKM, EPDM, Steam-EP, FDA FKM, Mil-Nitrile, Fuel Nitrile, PTFE and Silicone
Kalrez® seal options include: 4079, 6375 and 7075
Valve options include: Unvalved, actuator, steel, brass, 303 stainless steel and 316 stainless steel

Compatibility & Interchange Data:
Meets dimensional requirements of ISO 7241 Series B
Interchangeable with Parker-Hannifin 60 Series, Snap-Tite 72-Series, Hansen HK-Series, Faster Series 'HNV', Aeroquip/Eaton FD45, Stucchi Series IRB/IRBO/IRBX

Safety notes:
WARNING: Cancer and Reproductive Harm- www.P65Warnings.ca.gov

2645 Executive Park Drive, Weston, Fort Lauderdale, FL 33331, EEUU
sales@kmxusa.us
www.kmxusa.us

ESPECIFICACIONES TÉCNICAS

Body Size	1-1/2"
Burst Pressure	6500 PSI (450 bar)
Factory Part Number	12HBF12-B
Hex	2-5/8"
Length	4.81" (122.2mm)
Material	Brass
Maximum OD	3.00" (76.2mm)
Maximum Operating Pressure	1000 PSI (70 bar)
Temperature Range	-40°F to +250°F (-40°C to +121°C)
Thread	Female BSPP
Thread Size	1-1/2"-11
Weight Lb	4.5800

KMX

2645 Executive Park Drive, Weston, Fort Lauderdale, FL 33331, EEUU

sales@kmxusa.us

www.kmxusa.us