BIOPHARM WELD X WELD X CLAMP SHORT OUTLET TEE

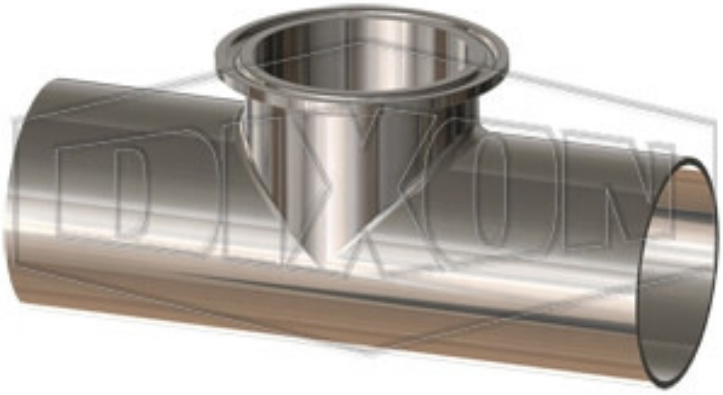

** Referential image*
*** Some features may vary without prior notice. Sale subject to inventory availability*

DATE
: 11/24/2026 12:23 AM

SKU
: 20926

BRAND
: DIXON VALVE

MODEL
: T7WWMS-150PL

Applications:
High Purity BioPharm fittings are commonly used in pharmaceutical, bioprocessing, semiconductor, cosmetics, food processing and beverage markets

Specifications:
All fittings are manufactured to meet the latest edition of the ASME BPE International Standard, Bioprocessing Equipment.
316L stainless steel material and dimensions meet all orbital welding specifications with controlled sulphur.
3-A Sanitary Standards for Sanitary Fittings, Number 63-03 (Authorization number 621).
PL Finish – SF1 (OD=32R a- ID=20R a)

Note:
Product markings per ASME BPE 2012 DT-10.1
Product markings include: job number, 316L, part number, heat number(s), surface finish code, ASME BPE
Per the specification, the size of the fitting may limit the space available for markings. When that occurs, not all markings are included.
The part number will describe the part configuration and size.
MTR (Material test report) certifications are included inside the resealable bag with each fitting. The MTRs are traceable through the Job Number found on each fitting. All fittings are capped to prevent damage and contamination. For easy identification each finish will have a different color cap; PL finish has blue caps and PM finish has white caps.

2645 Executive Park Drive, Weston, Fort Lauderdale, FL 33331, EEUU
sales@kmxusa.us
www.kmxusa.us

TECHNICAL SPECIFICATIONS

Finish	PL finish - SF1
Material	316L Stainless Steel
Factory Part Number	T7WWMS-150PL
Tube OD	1-1/2"
Weight Lb	0.4900

KMX

2645 Executive Park Drive, Weston, Fort Lauderdale, FL 33331, EEUU

sales@kmxusa.us

www.kmxusa.us