DQC H-SERIES ISO-B HIGH VOLUME FEMALE PLUG

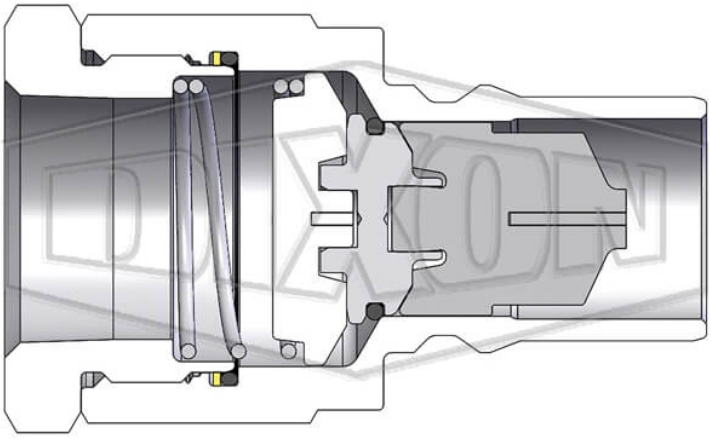

** Referential image*
*** Some features may vary without prior notice. Sale subject to inventory availability*

DATE
: 11/23/2026 11:55 PM

SKU
: 24467

BRAND
: DIXON VALVE

MODEL
: H12OF12

Features:
Poppet style shut-off valves
Designed to prevent fluid loss when disconnected

Construction:
Machined components are manufactured using solid bar stock
Stainless steel balls, retaining rings and springs maximize corrosion resistance and extend service life.
Steel componentry is plated using ROHS Compliant Trivalent Chrome.
Steel Nipples are hardened to provide heavy duty performance and resist brinelling.

Available Options:
Contact Dixon for all available option adders

Compatibility & Interchange Data:
Meets dimensional requirements of ISO 7241 Series B
Interchangeable with Parker-Hannifin 60 Series, Snap-Tite 72-Series, Hansen HK-Series, Faster Series 'HNV', Aeroquip/Eaton FD45, Stucchi Series IRB/IRBO/IRBX

Safety notes:
WARNING: Cancer and Reproductive Harm- www.P65Warnings.ca.gov

2645 Executive Park Drive, Weston, Fort Lauderdale, FL 33331, EEUU
sales@kmxusa.us
www.kmxusa.us

TECHNICAL SPECIFICATIONS

Body Size	1-1/2"
Burst Pressure	12500 PSI (850 bar)
Factory Part Number	H12OF12
Hex	2-5/8"
Length	4.76" (120.9mm)
Material	Steel
Maximum OD	2.88" (73.2mm)
Maximum Operating Pressure	2500 PSI (170 bar)
Temperature Range	-40°F to +250°F (-40°C to +121°C)
Thread	Female ORB
Thread Size	1-7/8"-12
Weight Lb	3.1500

KMX

2645 Executive Park Drive, Weston, Fort Lauderdale, FL 33331, EEUU

sales@kmxusa.us

www.kmxusa.us