ALUMINUM BUTTERFLY VALVE REPLACEMENTS/KITS

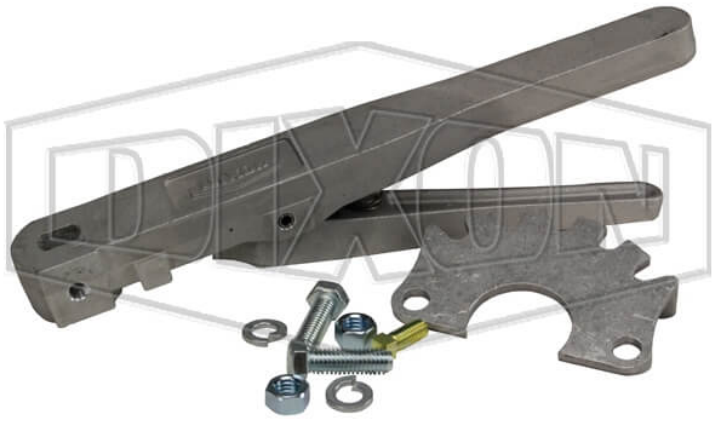

** Referential image*
*** Some features may vary without prior notice. Sale subject to inventory availability*

DATE
: 11/23/2026 09:46 PM

SKU
: 11252

BRAND
: DIXON VALVE

MODEL
: DB206-46-5

Features:
Handles are high strength 713 aluminum, with a retrogressive re-aging process which creates a stronger handle than the cast iron handle that is commonly used in the industry
5 open positions

Safety notes:
WARNING: Cancer and Reproductive Harm- www.P65Warnings.ca.gov

TECHNICAL SPECIFICATIONS

Description	Handle kit
Factory Part Number	DB206-46-5
Material	Aluminum
Used on	4"-6" Butterfly Valves
Weight Lb	1.2100

KMX
2645 Executive Park Drive, Weston, Fort Lauderdale, FL 33331, EEUU
sales@kmxusa.us
www.kmxusa.us