ALUMINUM BUTTERFLY VALVE REPLACEMENTS/KITS

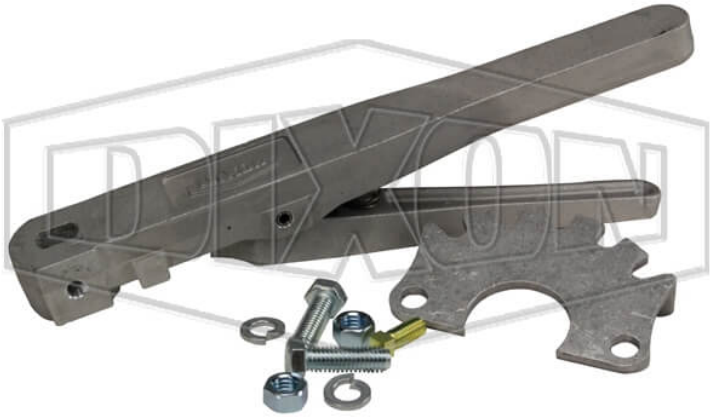

** Referential image*
*** Some features may vary without prior notice. Sale subject to inventory availability*

DATE
: 11/23/2026 10:29 PM

SKU
: 11251

BRAND
: DIXON VALVE

MODEL
: DB206-23-5

Safety notes:
WARNING: Cancer and Reproductive Harm- www.P65Warnings.ca.gov

TECHNICAL SPECIFICATIONS

Description	Handle Kit
Factory Part Number	DB206-23-5
Material	Aluminum
Used on	2"-3" Butterfly Valves
Weight Lb	1.3180

2645 Executive Park Drive, Weston, Fort Lauderdale, FL 33331, EEUU
sales@kmxusa.us
www.kmxusa.us