DQC ST-SERIES SNAP-TITE 71 INTERCHANGE FEMALE COUPLER

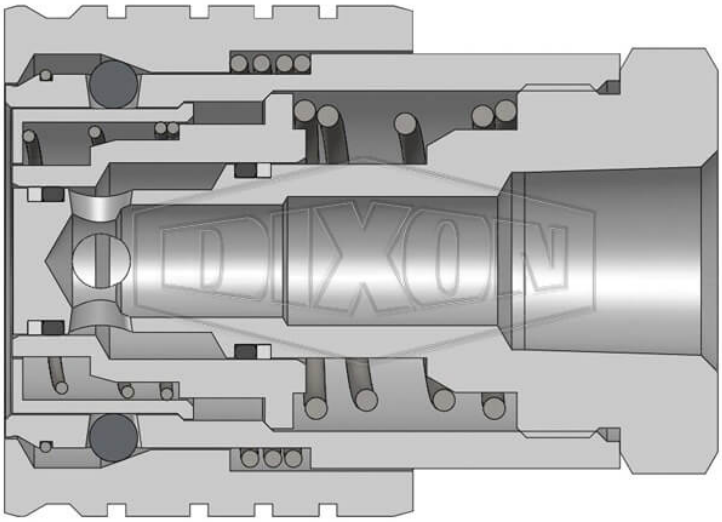

** Referential image*
*** Some features may vary without prior notice. Sale subject to inventory availability*

DATE
: 11/23/2026 11:44 PM

SKU
: 6585

BRAND
: DIXON VALVE

MODEL
: 8STBF10

Construction:
Machined components are manufactured using solid bar stock
Stainless steel balls, retaining rings and springs maximize corrosion resistance and extend service life.
Steel componentry is plated using ROHS Compliant Trivalent Chrome.
Steel coupler sleeves are hardened to resist deformation and maximize service life.
Nitrile (Buna-N) seals are standard
Incorporates PTFE anti-extrusion rings to protect seal components from dynamic impulse damage.

Available Options:
Contact Dixon for all available option adders
Standard seal options include: FKM, EPDM, Mil-Nitrile and Fuel Nitrile
Kalrez® seal options include: 4079, 6375 and 7075
Oxy-clean treatment is available

Compatibility & Interchange Data:
Interchangeable with Snap-Tite 71-Series

Safety notes:
WARNING: Cancer and Reproductive Harm- www.P65Warnings.ca.gov

2645 Executive Park Drive, Weston, Fort Lauderdale, FL 33331, EEUU
sales@kmxusa.us
www.kmxusa.us

TECHNICAL SPECIFICATIONS

Body Size	1"
Burst Pressure	19400 PSI (1300 bar)
Factory Part Number	8STBF10
Hex	2"
Length	3.67" (93.2mm)
Material	Steel
Maximum OD	2.73" (69.3mm)
Maximum Operating Pressure	7500 PSI (500 bar)
Temperature Range	-40°F to +250°F (-40°C to +121°C)
Thread	Female BSPP
Thread Size	1-1/4"-11
Weight Lb	2.8400

KMX
2645 Executive Park Drive, Weston, Fort Lauderdale, FL 33331, EEUU
sales@kmxusa.us
www.kmxusa.us