BEVEL SEAT GASKET

DATE
: 11/23/2026 09:27 PM

SKU
: 4445

BRAND
: DIXON VALVE

MODEL
: 40BS-H400

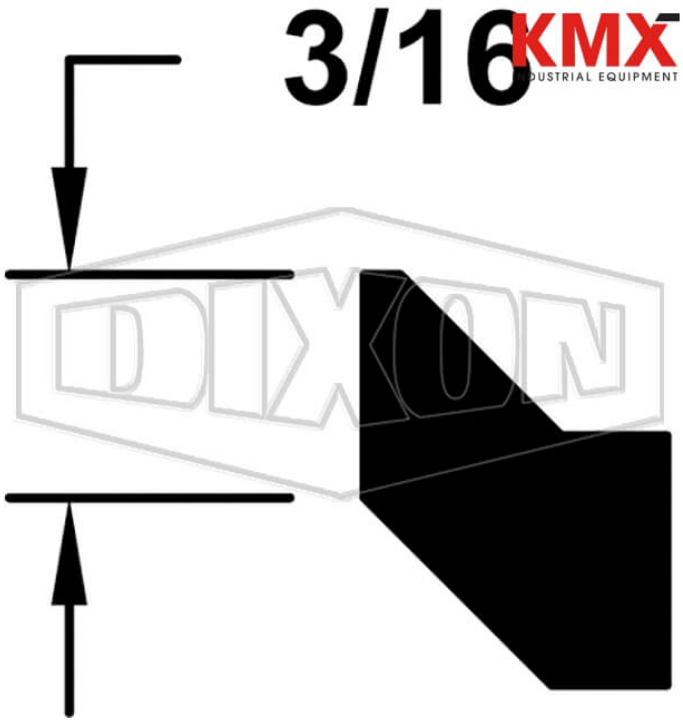

** Referential image*
*** Some features may vary without prior notice. Sale subject to inventory availability*

Specifications:
Meets 21CFR 177.1550
Passed U.S.P. Class VI Cytotoxicity testing

Safety notes:
WARNING: Cancer and Reproductive Harm- www.P65Warnings.ca.gov

TECHNICAL SPECIFICATIONS

Color	White
Color Code	no dot
Material	Heavy PTFE
Factory Part Number	40BS-H400
Size	4"
Weight Lb	0.0800

2645 Executive Park Drive, Weston, Fort Lauderdale, FL 33331, EEUU
sales@kmxusa.us
www.kmxusa.us