# BEVEL SEAT GASKET

DATE
: 11/23/2026 08:38 PM

SKU
: 4442

BRAND
: DIXON VALVE

MODEL
: 40BS-H200

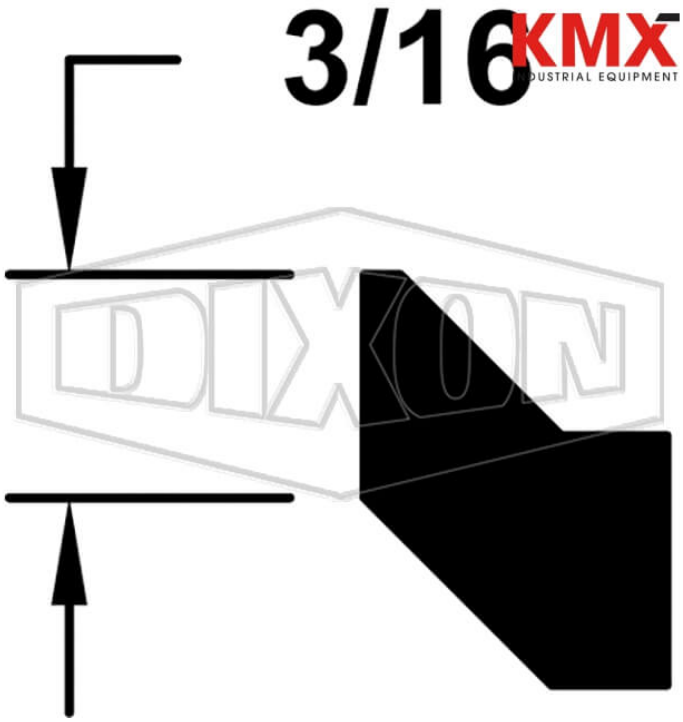


** Referential image*
*** Some features may vary without prior notice. Sale subject to inventory availability*

Specifications:
Meets 21CFR 177.1550
Passed U.S.P. Class VI Cytotoxicity testing

Safety notes:
WARNING: Cancer and Reproductive Harm- www.P65Warnings.ca.gov

## TECHNICAL SPECIFICATIONS

| | |
|---|---|
| **Color** | White |
| **Color Code** | no dot |
| **Material** | Heavy PTFE |
| **Factory Part Number** | 40BS-H200 |
| **Size** | 2" |
| **Weight Lb** | 0.0300 |



2645 Executive Park Drive, Weston, Fort Lauderdale, FL 33331, EEUU
sales@kmxusa.us
www.kmxusa.us