DIXON® CAM & GROOVE TYPE E ADAPTER X HOSE SHANK

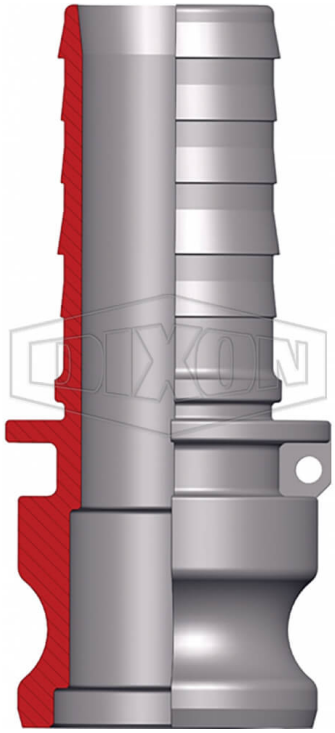

** Referential image*
*** Some features may vary without prior notice. Sale subject to inventory availability*

DATE
: 11/23/2026 07:41 PM

SKU
: 2131

BRAND
: DIXON VALVE

MODEL
: 200-E-MI

Applications:
Designed for use with liquids, consult Dixon for specific recommendations

Specifications:
Produced to interchange with all product produced to Commercial Item Description A-A-59326D

Features:
Precision machined to rigid tolerances

How it works:
To make a connection, simply slide the adapter into the coupler and with normal hand pressure, press the cam levers down.
Uncoupling is as quick and simple as coupling. Just lift the cam arms and remove the adapter.

Safety notes:
Under no circumstances should cam and groove couplings be used for compressed air or steam service!
Pressure rating is based on the seal of the mating part
Pressure rating recommendations are based on the use of mating Dixon fittings at ambient temperature 70°F / 21°C with a standard seal installed. For use at elevated temperature or other unusual operating conditions, consult Dixon.
WARNING: Cancer and Reproductive Harm- www.P65Warnings.ca.gov

2645 Executive Park Drive, Weston, Fort Lauderdale, FL 33331, EEUU
sales@kmxusa.us
www.kmxusa.us

TECHNICAL SPECIFICATIONS

Factory Part Number	200-E-MI
Material	Unplated Ductile Iron
Maximum Operating Pressure	250 PSI
Size	2"
Weight Lb	1.9900

KMX

2645 Executive Park Drive, Weston, Fort Lauderdale, FL 33331, EEUU

sales@kmxusa.us

www.kmxusa.us