DQC ST-SERIES SNAP-TITE 71 INTERCHANGE OLD STYLE FEMALE COUPLER

DATE
: 11/24/2026 12:24 AM

SKU
: 1788

BRAND
: DIXON VALVE

MODEL
: 16STOF12

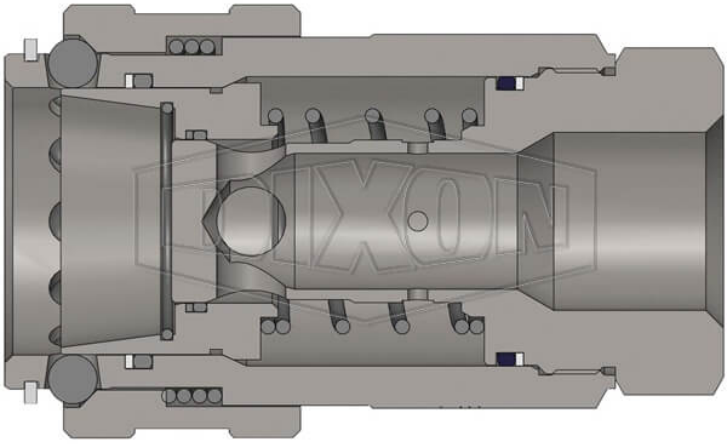

** Referential image*
*** Some features may vary without prior notice. Sale subject to inventory availability*

Construction:
Machined components are manufactured using solid bar stock
Stainless steel balls, retaining rings and springs maximize corrosion resistance and extend service life.
Steel componentry is plated using ROHS Compliant Trivalent Chrome.
Steel coupler sleeves are hardened to resist deformation and maximize service life.

Available Options:
Contact Dixon for all available option adders
Standard seal options include: FKM, EPDM, Mil-Nitrile and Fuel Nitrile
Kalrez® seal options include: 4079, 6375 and 7075
Oxy-clean treatment is available

Compatibility & Interchange Data:
Interchangeable with Snap-Tite 71-Series

Safety notes:
WARNING: Cancer and Reproductive Harm- www.P65Warnings.ca.gov

TECHNICAL SPECIFICATIONS

Body Size	2"
Burst Pressure	16000 PSI (1100 Bar)
Factory Part Number	16STOF12
Hex	3.78"
Length	6.20" (157.5mm)
Material	Steel

2645 Executive Park Drive, Weston, Fort Lauderdale, FL 33331, EEUU
sales@kmxusa.us
www.kmxusa.us

TECHNICAL SPECIFICATIONS

Maximum OD	4.47" (113.5mm)
Maximum Operating Pressure	5000 PSI (345 bar)
Temperature Range	-40°F to +250°F (-40°C to +121°C)
Thread	Female ORB
Thread Size	1-7/8"-12
Weight Lb	8.9600

KMX

2645 Executive Park Drive, Weston, Fort Lauderdale, FL 33331, EEUU

sales@kmxusa.us

www.kmxusa.us