DIXON CAM & GROOVE TYPE E ADAPTER X HOSE SHANK

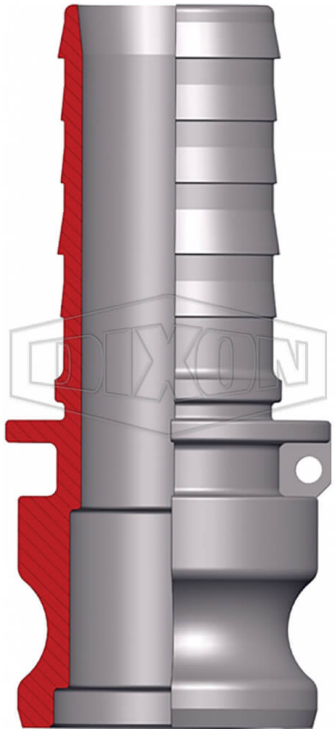

** Referential image*
*** Some features may vary without prior notice. Sale subject to inventory availability*

DATE
: 11/23/2026 09:16 PM

SKU
: 22101

BRAND
: DIXON VALVE

MODEL
: 150-E-SS

Applications:
Designed for use with liquids, consult Dixon for specific recommendations

Use:
Suitable for use with King Crimp sleeves and ferrules

Specifications:
Produced to interchange with all product produced to Commercial Item Description A-A-59326D

Features:
Precision machined to rigid tolerances

How it works:
To make a connection, simply slide the adapter into the coupler and with normal hand pressure, press the cam levers down.
Uncoupling is as quick and simple as coupling. Just lift the cam arms and remove the adapter.

Safety notes:
Under no circumstances should cam and groove couplings be used for compressed air or steam service!
Pressure rating is based on the seal of the mating part
Pressure rating recommendations are based on the use of mating Dixon fittings at ambient temperature 70°F / 21°C with a standard seal installed. For use at elevated temperature or other unusual operating conditions, consult Dixon.
Only use the crimp style shanks with the crimp style sleeves and ferrules. Due to differences in dimensions and tolerances for safety reasons, do not interchange other manufacturer's products with Dixon products.
WARNING: Cancer and Reproductive Harm- www.P65Warnings.ca.gov

2645 Executive Park Drive, Weston, Fort Lauderdale, FL 33331, EEUU
sales@kmxusa.us
www.kmxusa.us

TECHNICAL SPECIFICATIONS

Material	316 Stainless Steel
Maximum Operating Pressure	250 PSI
Factory Part Number	150-E-SS
Size	1-1/2"
Weight Lb	1.1900

KMX
2645 Executive Park Drive, Weston, Fort Lauderdale, FL 33331, EEUU
sales@kmxusa.us
www.kmxusa.us